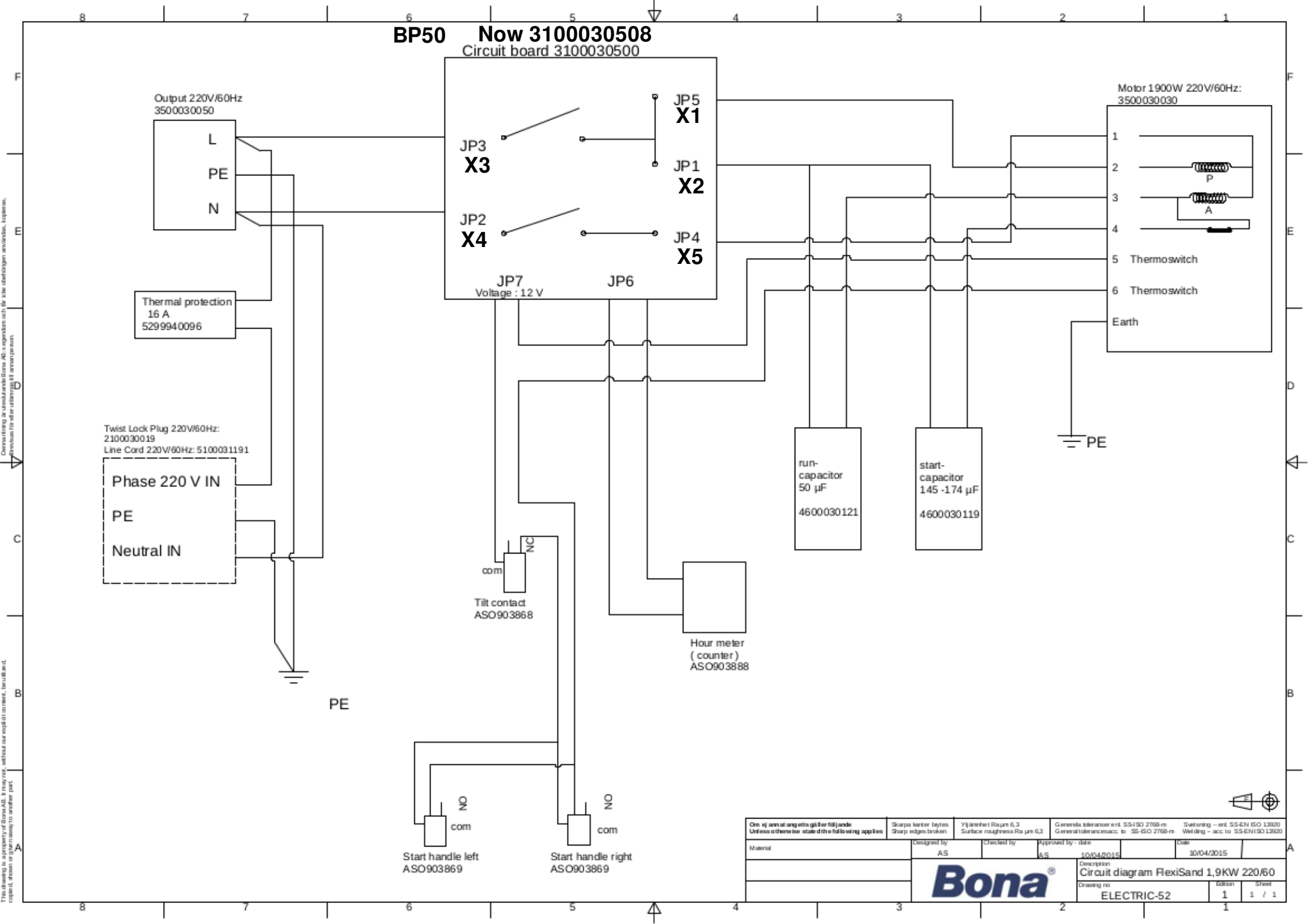
BP50 Now 3100030508
Circuit board 3100030500
Output 220V/60Hz
3500030050
L
PE
N
JP3
X3
JP2
X4
JP5
X1
JP1
X2
JP4
X5
JP7
Voltage : 12 V
JP6
Motor 1900W 220V/60Hz:
3500030030
1
2
P
3
A
4
5 Thermoswitch
6 Thermoswitch
Earth
Thermal protection
16 A
5299940096
Twist Lock Plug 220V/60Hz:
2100030019
Line Cord 220V/60Hz: 5100031191
Phase 220 V IN
PE
Neutral IN
PE
run-
capacitor
50 µF
4600030121
start-
capacitor
145 -174 µF
4600030119
PE
com
NC
Tilt contact
ASO903868
Hour meter
(counter)
ASO903888
NO
com
Start handle left
ASO903869
NO
com
Start handle right
ASO903869
Om ej annat angetts gäller följande
Unless otherwise stated the following applies
Skarpa kanter bytes
Sharp edges broken
Ytjämnhet Ra µm 6,3
Surface roughness Ra µm 6,3
Generella toleranser enl. SS-ISO 2768-m
General tolerances acc to SS-ISO 2768-m
Svetsning – enl. SS-EN ISO 13920
Welding – acc to SS-EN ISO 13920
Material
Designed by
AS
Checked by
Approved by - date
AS 10/04/2015
Date
10/04/2015
Bona
Description
Circuit diagram FlexiSand 1,9KW 220/60
Drawing no
ELECTRIC-52
Edition
1
Sheet
1 / 1

BP50 Board
Terminal Identification

Old ASK3100030500

X1 / JP5
X2 / JP1
X3 / JP3
X4 / JP2
X5 / JP4

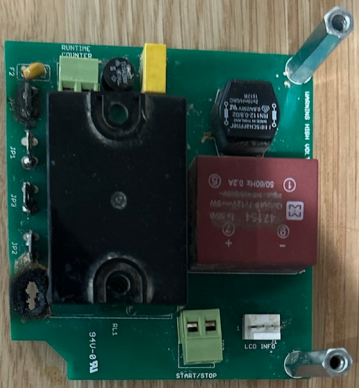

New ASK3100030508

X1 / JP5
X2 / JP1
X3 / JP3
X4 / JP2
X5 / JP4



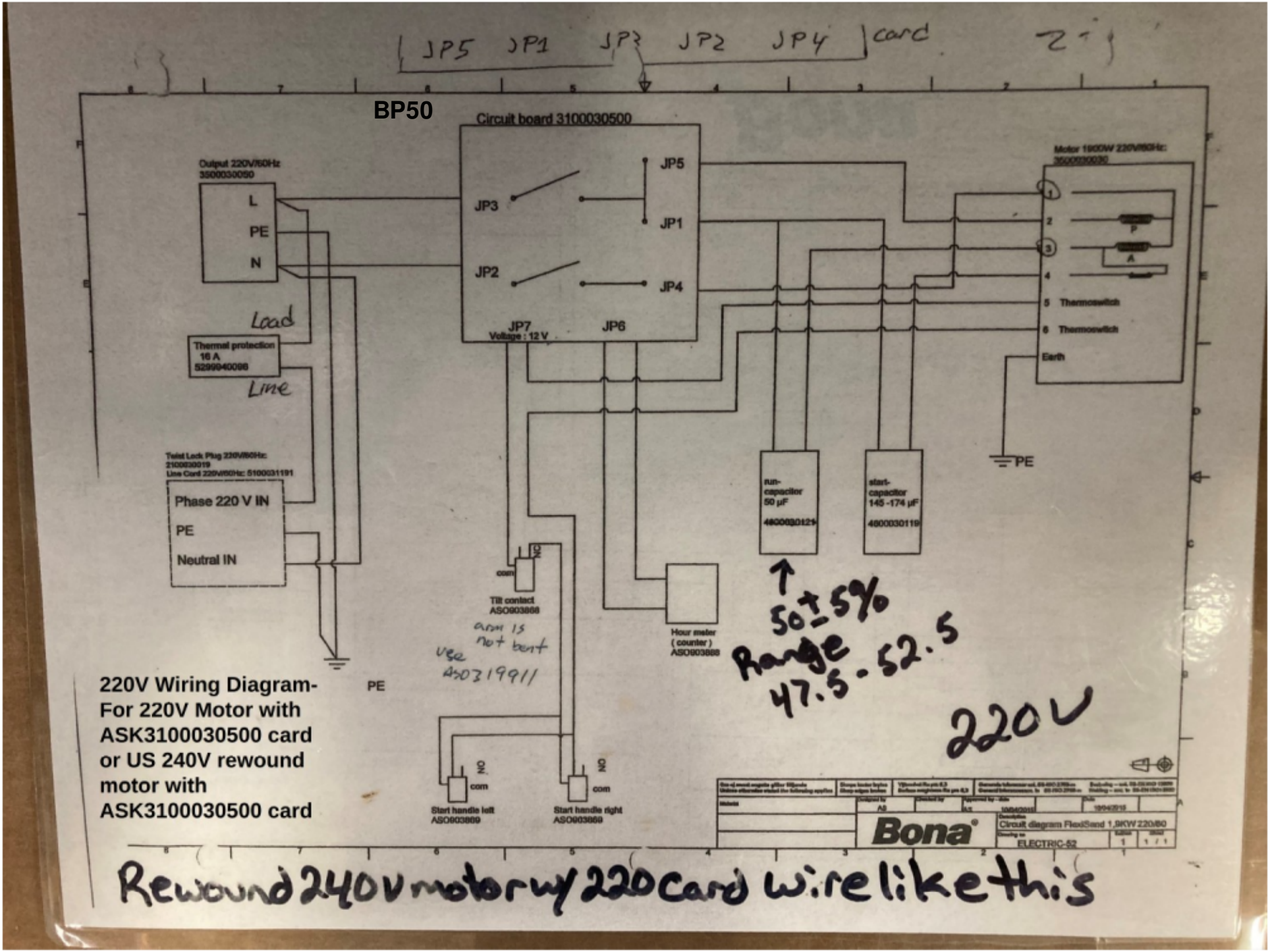

220V Wiring Diagram- For 220V Motor with ASK3100030500 card or US 240V rewound motor with ASK3100030500 card

Rewound 240V motor w/ 220 card wire like this

JP5 JP1 JP3 JP2 JP4

BP51

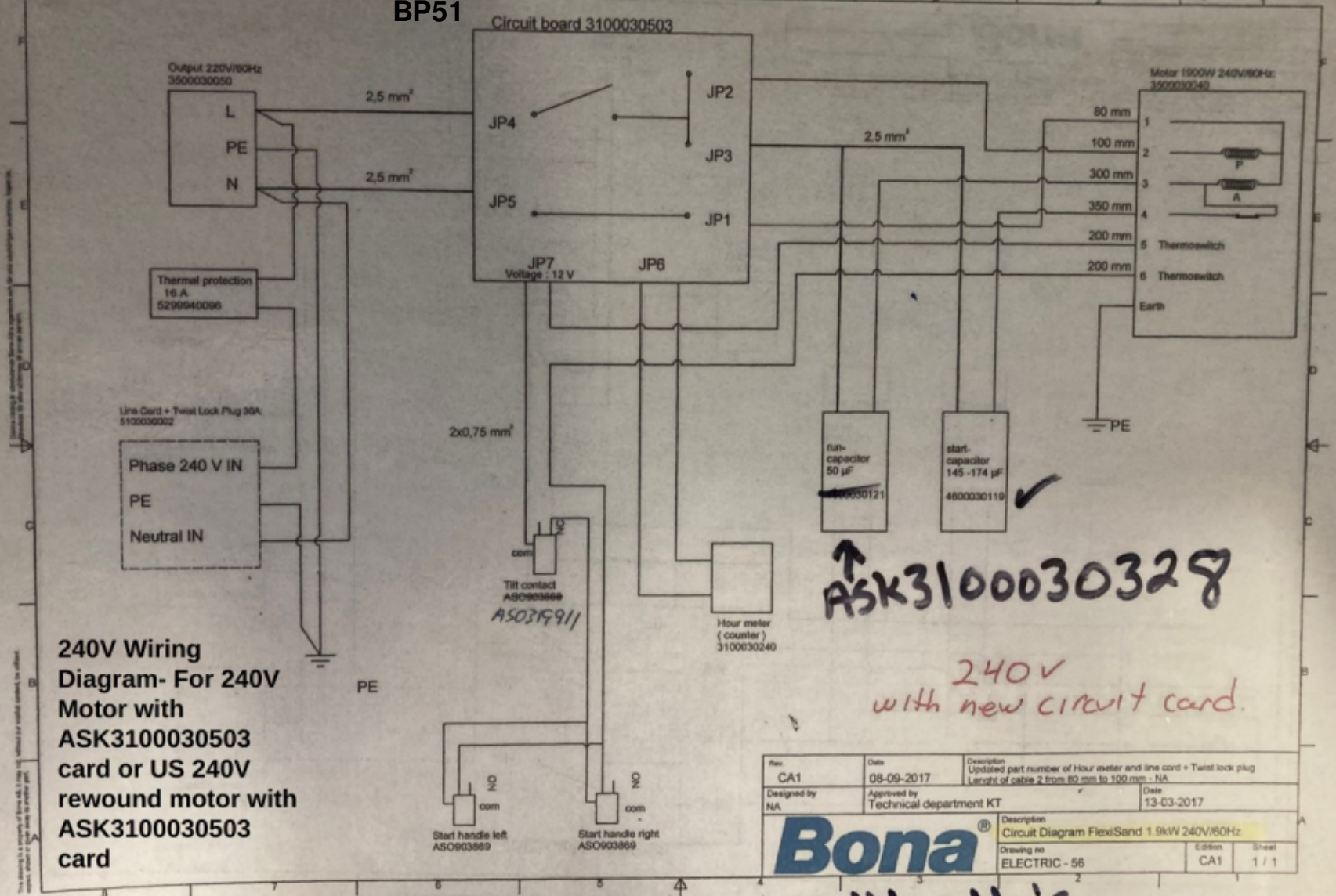

ASK3100030328

240V Wiring Diagram- For 240V Motor with ASK3100030503 card or US 240V rewound motor with ASK3100030503 card

240V with new circuit card.

Rev.	Date	Description
CA1	08-09-2017	Updated part number of Hour meter and line cord + Twist lock plug Lenght of cable 2 from 80 mm to 100 mm - NA
Designed by: NA	Approved by: Technical department KT	Date: 13-03-2017
Bona®	Description: Circuit Diagram FlexiSand 1.9kW 240V/60Hz	
	Drawing no: ELECTRIC - 56	Edition: CA1 — Sheet: 1 / 1

240rewound - can use 240card - wire like this
Per: Bobby 12-18-19

Denna ritning är uteslutande BonaKemi AB:s egendom och får icke obehörigen användas, kopieras, förevisas för eller utlämnas till annan person.

This drawing is a property of BonaKemi AB. It may not, without our explicit content, be utilized, copied, shown or given away to another part.

Circuit board ASO315110

Output 115 V
Light

L
PE
N

Black
Blue

JP3
JP2
JP5
JP1
JP4
JP7
JP6

Motor ASO900910
Motor
AC-Motor
Black
White
PE

Output 115 V
Vacuum cleaner

L
PE
N

Hour meter
(counter)

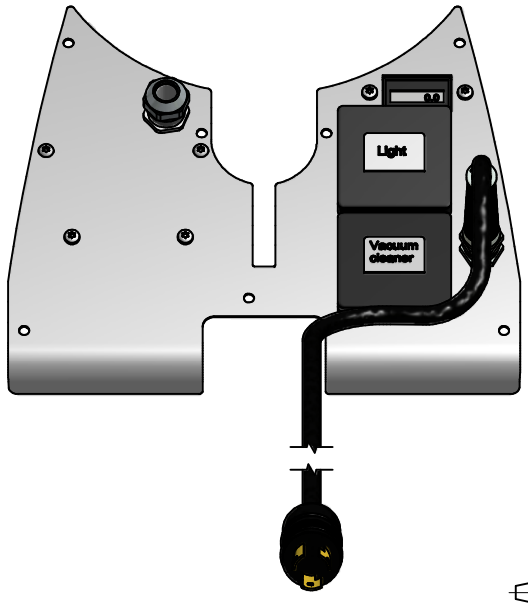

NC
com
Tilt contact

Cord rack

Phase 115 V IN
PE
Neutral IN

PE

NO
com
Start handle left

NO
com
Start handle right

Om ej annat angetts gäller följande **Unless otherwise stated the following applies**	Sharp edges broken Skarpa kanter brytes.	Ytjämnhet Ra µm 6,3 Surface roughness Ra µm 6,3	Generela toleranser enl. SS-ISO 2768-m General tolerancesacc. to SS-ISO 2768-m	Svetsning -- enl. SS-EN ISO 13920 Welding -- acc. to SS-EN ISO13920	
Material		Designed by semaha	Checked by	Approved by - date semaha 2010-04-27	Date 2009-04-07
ASO314600 - Start.equipment 115 V compl..iam		Bona®		Description Circuit diagram Bona FlexiSand 115 V	
				Drawing no ASO314600-CD	Edition 1
					Sheet 1 / 1