Clarke®
American Sanders

American Sander 12
Wiring Diagram 5/06 (models 07044C, 07049C, 07108A and 07109A)

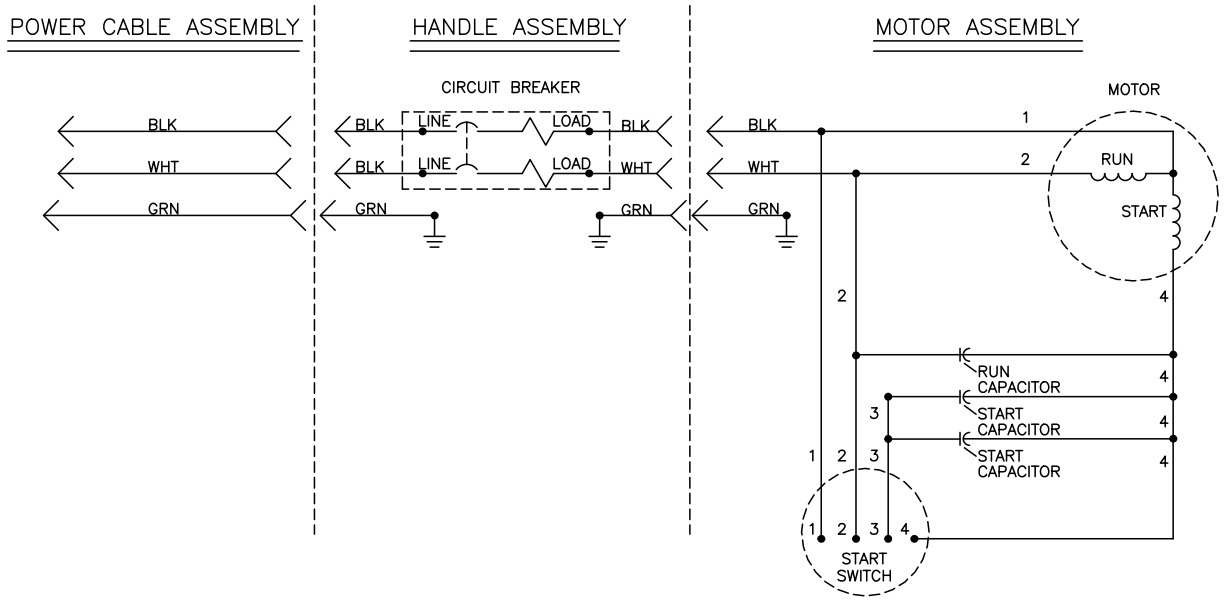

Clarke®
American Sanders
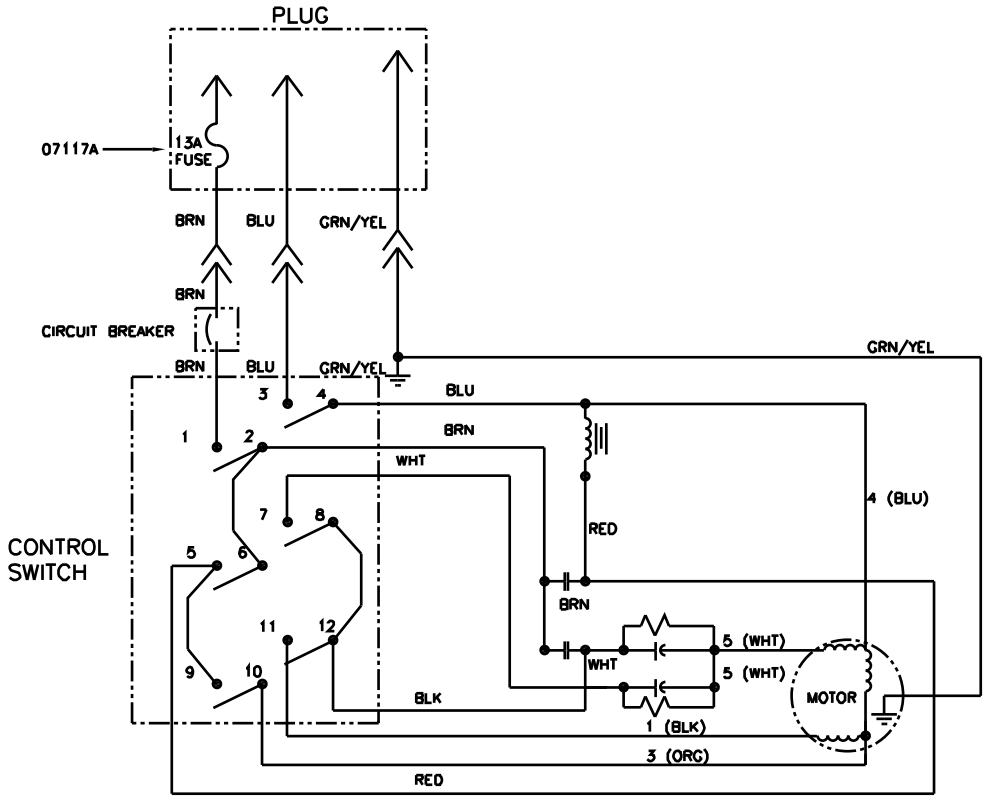
American Sander 12
Wiring Diagram 5/06 (model 07120A)